Road Maintenance Project

Tender for Construction of Reinforced Concrete U-Drain in Palm Loop

September 2016

MINISTRY OF COMMUNICATIONS, WORKS & LABOUR

P O BOX 344, BRADES, MONTSERRAT, W I

◈ Tel: (664) 491-2521/2522 ◈ Fax: (664) 491-6659 ◈ E-mail: mcw@gov.ms

September 21st, 2016

Dear Sir/Madam,

Re: Tender for Construction of Reinforced Concrete U-Drain in Palm Loop

You are invited to submit a tender for the above captioned project. Included are the tender documents consisting of:

1. Instruction to Tenderers
2. Document Check List
3. Form of Tender
4. Bill of Quantities
5. Form of Agreement
6. Anti-Collusion Statement
7. General Conditions of Contract
8. Evaluation Criteria
9. Construction Drawings

Please return a complete document of the priced and signed Form of Tender, Bill of Quantities, Completed Document Check List, signed anti-collusion statement and a copy of your **tax compliance certificate (if locally based). These should be placed in an inner envelope and** addressed to **The Chairperson, Departmental Tender Committee, Ministry of Communications, Works & Labour, Brades, MSR1110, Montserrat. The name of the project should also be written on this inner envelope and should read, "Tender for Construction of Reinforced Concrete U-Drain in Palm Loop". The name of the tenderer should also be written on the inner envelope.**
This envelope should be placed into an outer envelope addressed to **The Chairperson, Departmental Tender Committee, Ministry of Communications, Works & Labour, Brades, MSR1110, Montserrat. The name of the project should also be written on this outer envelope and should read, "Tender for Construction of Reinforced Concrete U-Drain in Palm Loop".** The outer envelope should bear no identification of the tenderer. Tenders are to be received no later than **2:00p.m** on **Wednesday October 5th 2016**. Please ensure that no additional marks are placed on the outer envelope.
Tenders are to be taken to the top floor of the Ministry of Communications Works & Labour building where the tenderer would place their tender in the Tender Box and be given a receipt after this is completed.

A site visit will be arranged for **10:00 am on Wednesday, September 28th, 2016** at the junction of the road below the St. Augustine Primary School. Any queries relating to the tender or works included should be made in writing to the Director, Public Works Department.

Yours faithfully,

.....

Beverley Mendes
The Chairperson
Departmental Tender Committee
Ministry of Communications, Works and Labour

Instructions to Tenderers

1. The Montserrat General Conditions of Contract will be adopted for this contract.

2. Tenderers must complete the **Form of Tender, Document Check List, Anti-collusion statement** and **Bill of Quantities** for the works. Failure to fully complete these documents will lead to their bid becoming non-compliant and rejected.

3. **The tenderer must submit a Tax Compliance Certificate from Inland Revenue along with the bidding documents. In the case of a sole trader, the tax compliance certificate should be issued in that individuals name. However, where the sole trader is trading using a business name, the tax compliance certificate should be issued in the business name. In the case of a company, the tax compliance certificate should be issued in the name of the Company". It is therefore incumbent on the bidder to ensure that the tax compliance certificate is issued in the correct name. Diligent checks will be made with the Inland Revenue Department and the Financial Services Commission to verify the accuracy of certificates. Tenders received with improper tax compliance certificates would be rejected.**

4. The tenderer will be deemed to have inspected the site and be familiar with the environment and working conditions on the site.

5. All works undertaken will be the subject of taxation in accordance with the current legislation.

6. The **successful tenderer** should submit details of their current insurance sufficient to satisfy the requirements for insurance given in the Conditions of the Contract and the Specification. The insurance shall jointly indemnify the Contractor and in the amount that is the greater of either **EC$30,000.00 or the Submitted Price**. **This will be requested before the signing of the contract.**

7. Tenders should be returned in a sealed envelope, no later than **2:00p.m.** on **Wednesday, 5th October 2016.** Tenders and all supporting documents should be enclosed in an inner envelope duly sealed and bearing the words, ***"Tender for Construction of Reinforced Concrete U-Drain in Palm Loop"*** and addressed to **The Chairperson, Departmental Tender Committee, Ministry of Communications Works and Labour, Brades, Montserrat.** The name of the tenderer should also be placed on this inner envelope. The inner envelope should be placed in a large outer envelope and addressed to **The Chairperson, Departmental Tender Committee, Ministry of Communications Works and Labour, Brades, Montserrat.** The name of the project should also be written on the outer envelope and should read, **"Tender for Construction of Reinforced Concrete U-Drain in Palm Loop".** The outer envelope should bear no identifiable mark of the tenderer. Tenders should not have any additional marks on the envelope. Envelopes are to be taken to the top floor of the Ministry of Communications Works & Labour building where the tenderer would place their tender in the Tender Box and be given a receipt after this is completed. **Late tenders will not be considered.**

8. Tenderers are to provide all document or information requested as part of the Tender Evaluation.

9. All tenders will be arithmetically checked; any errors will be brought to the tenderers attention. The rates supplied would be the basis for the arithmetic correction and would be the determining factor for any queries about the corrected price.

10. Tenderers are not allowed to submit alternative tenders.

11. The Employer is not bound to accept the lowest tenderer and has the right to accept and reject any tender offers.

Description of the Works

- Construct Reinforced Concrete U-drain
- Construct Reinforced Concrete Headwall
- Provide labour for laying of HDPE drain pipe
- Construct Reinforced Concrete Catchment basin

Ministry of Communications, Works and Labour

Tender Document Checklist

Project Title: ***Tender for Construction of Reinforced Concrete U- Drain in Palm Loop***
Date scheme advertised: ***Wednesday 21st September 2016***

Tender Deadline Date: ***Wednesday 5th October 2016***

Tender Deadline Time: ***2:00pm***

Below are the following documents that should be provided for a contractor's bid to be valid. Bidders are asked to supply and tick off the following information. Failure to provide any of the stated documents will result in the bid being considered non-compliant and rejected.

The below documents should be presented with their bid to ensure that their bid is valid.

Signed Form of Tender (**Including time for completion and notice period**) ☐

Completed Bill of Quantities ☐

Tax Compliance Certificate ☐

Signed Anti-Collusion Statement ☐

Details of Contractor Experience ☐

..... ……

Signed on behalf of Contractor Date

FORM OF TENDER

The Chairperson
Departmental Tender Committee
Ministry of Communications, Works and Labour
Brades
Montserrat

Dear Sir/Madam;

Re: Tender for Construction of Reinforced Concrete U-Drain in Palm Loop

I/We the undersigned undertake to construct and complete the above Works in accordance with the General Conditions of Contract, Specifications and Drawings for the sum of:
EC$
…….
(words)…….……
……
……

If my/our tender is accepted, I/We undertake to commence the Works within ____ **days** from the date of receipt by me/us of the official order and complete the works within ____ **days** from the date of receipt by me/us of the official order.

I/We understand I/We shall not be reimbursed for any cost that may have been incurred in compiling this tender. I/We confirm this tender shall remain valid for a period of 90 days from the date of submission of this tender.

Name…….

Signed…….

Name of firm (If Applicable) ……..

Address……..

…….

Tel. nr…….

Fax nr…….

Email Address …….

Date…….

AGREEMENT

between

GOVERNMENT OF MONTSERRAT

and

…….

1. This Agreement is made the ……. day of…….**2016** between the **GOVERNMENT OF MONTSERRAT** having its headquarters at Government Headquarters, Brades, Montserrat acting herein and represented by **Mrs. Beverley Mendes,** Permanent Secretary, Ministry of Communications Works and Labour (hereinafter referred to as "**GOM"**) of the one part and ……. whose address is ……. acting herein and represented by ……. (hereinafter referred to as the "**Contractor"**) of the other part.

   The Employer is desirous that certain infrastructure works should be carried out in the Palm Loop, Woodlands region and has been accepted by the contractor for the sum of …… ……. **($.....)** are the amount to carry out the works according to the schedule and other documents which comprised the contract document.

2. This Agreement shall take effect from the…… and subject to prior termination as provided by this agreement shall continue for a period of ……... months.

3. In this Agreement:

   a) "Agreement" means these General terms and Conditions in Schedule 1 together with the Specification drawings, Signed Form of Tender, Priced Bill of Quantities, Specifications, Contract Drawings, tender circular, addenda in Schedule 4 and any document incorporated into this agreement by reference;

   b) "**Contractor**" includes the **Contractor**, and his/its employees;

   c) "deliverables" includes specifications, drawings and any component element of the Works;

   d) "Engineer" means a duly authorized representative of GOM who is also qualified and trained as a Civil Engineer. The Engineer or where a project manager is appointed for a particular project is responsible for total contract management and shall determine and enact measures to mitigate any risks to the project. The Engineer will hold direct communication with the Contractor and the Contractor shall adhere to such instructions given by the Engineer in the same way as if they were given by the Contract Administrator.

   e) "Works" means the works to be executed in accordance with this agreement as described in the Specification drawings.

4. The **Contractor** is an independent contractor and shall not be considered in any respect as being an employee of **GOM**.

5. The **Contractor** shall supply its Montserrat Social Security number and verify the accuracy of the number as entered on all documentation connected with this agreement, and shall provide to **GOM** evidence of good standing with and observance of the requirements of the Social Security Board.

6. The representative of **GOM** for the administration of this agreement is the Permanent Secretary, Ministry of Communications and Works (hereinafter referred to as the Administrator). The Administrator shall have final authority for acceptance of the **Contractor's** performance, and if satisfactory shall initiate the process for approval of payment to the **Contractor**. No payment shall be made without such approval.

7. The **Contractor** shall provide the deliverables specified in column 1 of Schedule 2, within the timelines set out in Column 2 of Schedule 2, in return for the fees set out in column 3 of Schedule 2, under the terms and conditions outlined in Schedule 1.

IN WITNESS WHEREOF the parties hereto have executed this Agreement on the date herein first mentioned.

BY	BY
_____	_____
Beverley Mendes Permanent Secretary, Ministry of Communications and Works	
WITNESS	WITNESS
_____	_____

SCHEDULE 1

Terms and Conditions

I. **GOM** may at any time by a written notice modify the deliverables described in Schedule 2 and promptly upon receipt of such modification the **Contractor** shall within 7 days either advise that the change will not affect its costs or cause a delay in providing the deliverables, or furnish a breakdown of estimated changes in costs or delay in the deliverables attributable thereto. Upon receipt of the breakdown by **GOM** any changes necessary to the other terms and conditions of the agreement shall promptly be negotiated by the parties and incorporated in an amendment to this contract. The **Contractor**'s failure to advise of any such changes or delays shall constitute the **Contractor's** consent to the modification without adjustment to the other terms and conditions of this agreement.

II. As full consideration for the services performed by the **CONTRACTOR** under the terms of this agreement the **GOM** will pay the fees as outlined in Schedule 2, payable against original invoices delivered to the **GOM** at its headquarters by the **CONTRACTOR**, provided that **GOM** may give notice of its intention not to pay such fee where:

   a. The **CONTRACTOR** has failed to carry out services/provide the deliverables, or has defectively carried out services/provided deliverables required by this Agreement to be carried out and has not remedied such failure or defect within a reasonable time;
   b. The **CONTRACTOR**, by act or omission has caused damage to personnel or property of the **GOM** or any third party;
   c. there is a breach of any other provision of this Agreement;

   and upon giving such notice the **GOM** may withhold payment accordingly.

III. The **GOM** shall have the right, at its expense, to have a representative of the **GOM** inspect such records and invoices of the **CONTRACTOR** as are necessary to verify the **CONTRACTOR's** performance and all expenses submitted pursuant to this Agreement and the **CONTRACTOR** shall make such records and invoices available for inspection during normal business hours at the **GOM** Headquarters.

IV. All records related to this Agreement at any time in the possession of the **CONTRACTOR** shall be retained for a period of one (1) year after the termination of this Agreement. Records relating to any claim arising out of the performance of this Agreement, or costs and expenses of this Agreement to which exception has been taken by the **GOM**, shall be retained by the **CONTRACTOR** until the claim has been resolved.

V. The **CONTRACTOR** shall not remove any material, goods or equipment purchased by the **GOM** and furnished to the **CONTRACTOR** to facilitate the performance of its obligations under this contract without the prior written consent of the Administrator.

VI. The **CONTRACTOR** shall not at any time during or after the term of this Agreement divulge or allow to be divulged to any person any information which comes into its possession by virtue of its performance of this Agreement, which relates to the business and affairs of the **GOM** except upon authorization by the **GOM**. The **CONTRACTOR** shall not seek to acquire any such information outside of the performance of its/his duties under this Agreement.

VII. (a) The **Contractor** shall not assign or sub-contract any of its rights or duties under this Agreement without the prior written consent of the **GOM**, such consent not to be unreasonably withheld.

(b) The **Contractor** retains full and complete responsibility for every aspect of the Works and deliverables including any aspect which might be sub-contracted or assigned to another person under clause VII (a), including the duty to ensure that any such part of the Works or deliverables are completed in a good and workmanlike manner, with sound materials and in conformity in all respects with the drawings, elevations and specifications and at all times and in every respect in compliance with the Building Codes of Montserrat and all the applicable laws.

(c)The **Contractor** shall respond to any reasonable query from GOM regarding the quality and quantity of materials procured by him/it for use in the Works and deliverables and shall provide **GOM** with satisfactory evidence of his/its compliance with the agreed specifications periodically/monthly/quarterly during the construction of the Works and within Seven days of completion.

(d) The **Contractor** shall procure and supply all materials required and described in the priced Bill of Quantities, specifications, tender circular, addenda and contract drawings and shall ensure that those materials are used in construction of the Works and provision of the deliverables.

VIII. The **Contractor** agrees to undertake and complete Construction of Reinforced Concrete U-drain Works and all Works described in the Specifications, drawings, the tender documents and all tender circulars and addenda.

IX. The **Contractor** and **GOM** agree that they will each have the respective obligations under this agreement as outlined in **Schedule3**.

(a) The **Contractor** agrees to indemnify, and keep the **GOM** indemnified, from and against any and all loss, damage, expense, liability, claim or proceedings (whether criminal or civil) suffered by **GOM's** agents, servants or third parties, including any legal fees and costs incurred, resulting from a breach of this Agreement by the **Contractor** and/or arising in connection with the performance of this agreement by the **Contractor** or arising out of or in the course of or caused by the carrying out of the Works:

(i) in respect of personal injury to or death of any person; or
(ii) in respect of any damage whatsoever to any property real or personal due to any negligence, omission and default of the Contractor.

(b) The **Contractor** agrees to indemnify **GOM** in respect of claims from anyone suffering damage to their equipment or property, or accidents suffered by their employees, agents or third parties, resulting from the **Contractor's** actions.

X. The Contractor shall produce such evidence as GOM may reasonably require that the insurance referred to in the form of tender have been taken out and are in force from commencement of works until project completion.

XI. The Contractor shall ensure that suitable systems for controlling traffic and pedestrian movements are discussed with the Traffic Commissioner and implemented during its operations to minimize any delays to road users.

XII. (a)**GOM** will disburse each payment in respect of the deliverables only after receipt of certification issued by the Engineer that:

(i) the respective phase of the Works or deliverable has been satisfactorily completed and complies with the drawings and building code;

(ii)the value of the work completed at that stage corresponds to or exceeds the sums previously disbursed.

(b) **GOM** shall retain 5% of each payment up to a maximum of 3% of the contract sum and release the accumulated total retention to the **Contractor** at the end of the warranty period provided that all works and repairs have been executed to **GOM's** satisfaction.

XIII. The parties agree that a warranty period of 12 months is part of the agreement, during which time the Contractor bears full responsibility for the execution of maintenance of the works and any repair or correction which becomes necessary due to the failure and incorrect performance of the Contractor.

XIV. The **Contractor** shall notify **GOM** in writing of his/its completion of the Works. The Engineer shall certify the date when in his opinion, the Works have reached practical completion. This date shall be the date of commencement of the warranty period.

XV. The **Contractor** shall pay to **GOM** a penalty of 1% of the contract price a day, for every day the completion of the Works is overdue.

XVI. The parties agree that a dispute relating to the agreement shall be determined by a Mediator. Any party may request that a Mediator be appointed. The parties shall try to agree a single Mediator by whom the matter shall be determined. The Mediator once appointed shall specify a reasonable time and date for submissions, and information by each party. The parties shall cooperate with the Mediator and with such enquiries that he/she may deem necessary. No confidential information supplied to the Mediator shall be disclosed to any third party. The Mediator may set out his/her own procedure and be entitled to award financial damages or to order the performance or prohibition of any act as he/she deems fit. In the event agreement cannot be reached clause 23 condition of contract shall apply.

XVII. a) The **Contractor** shall receive two complete originals of this agreement.
b) Subsequent to the commencement of the agreement, the **Contractor** shall receive a copy of all additions to and amendments to the Specifications or drawings.

XVIII. a) If, before the date for practical completion, the **Contractor** shall make a default in any one or more of the following respects:

(i) Without reasonable cause he/it wholly or substantially suspends the carrying out of the Works, or

(ii) He/it fails to proceed regularly or diligently with the Works, or

(iii) He/it refuses or neglects to comply with a written notice/instruction given by the Engineer and by such refusal or neglect the works are materially and adversely affected

The Engineer may give to the **Contractor** a notice specifying the default or defaults.

(b) If the **Contractor** continues with the default for 14 days from the issue of the notice under the agreement **GOM** may by a further notice to the **Contractor** terminate this agreement. Such termination shall take effect on the date of receipt of such further notice.

(c) **GOM** shall not issue a notice of termination unreasonably or vexatiously.

(d) The Engineer shall determine the amount due to the **Contractor** which shall include loss, damage or expenses incurred by **GOM** as a direct consequence of the termination. A final payment certificate will be prepared by the Engineer.

(e) If, before the date of practical completion, the carrying out of the whole or substantially the whole of the uncompleted works is suspended by reason of one or more of the events stated below for a period of three months or more

(i) Force majeure, or

(ii) The Engineer's instruction

the **Contractor** or **GOM** may upon expiry of the period of the suspension give notice to the other party that unless suspension is terminated within 7days after the receipt of such notice, **GOM** shall pay to the **Contractor** the total value of the Works properly executed at the date of termination of this agreement, such value ascertained in accordance with the conditions as if the agreement had not been terminated.

(f) A party shall not issue a notice of termination unreasonably or vexatiously.

XIX. The Engineer may issue instructions on behalf of **GOM**, with regard to the postponement of any or all the Works to be executed under this contract.

XX. The failure by either party to enforce at any time or for any period any one or more of the terms or conditions of this Agreement shall not be a waiver of them or of the right at any time subsequently to enforce all terms and conditions of this Agreement. No waiver of any default or non-performance by any party shall be considered a waiver of any subsequent default or non-performance.

XXI. This Agreement supersedes any prior Agreement between the parties whether written or oral relating to the subject matter hereof, but without prejudice to any rights which have already accrued to either of the parties.

XXII. This Agreement shall be governed by the laws of Montserrat in every particular and shall be deemed to be made in Montserrat.

XXIII. (a) Both parties shall be released from their respective obligations in the event of national emergency, natural disaster, war, prohibitive governmental regulation or if any other cause beyond the reasonable control of the parties or either of them renders the performance of this Agreement impossible whereupon all money due under this Agreement shall be paid immediately.

(b) A party that is delayed in meeting or that fails to perform its obligation under this agreement because of Force Majeure, shall have no liability to the other for such delay or failure to perform. Both parties shall use reasonable endeavours to mitigate as far as possible, the effects of the Force Majeure event.

(c) If one party is prevented from or delayed in performing its obligations under this agreement as a result of Force Majeure, the other party shall be released to the equivalent extent from its obligation in relation to that particular Force Majeure event.

XXIV. The provisions relating to confidentiality, indemnities and limitation of liability shall survive any completion, rescission, expiration or termination of this agreement. In addition, all rights and restrictions relating to any perpetual licenses and all payment terms relating to any outstanding payments shall survive.

XXV. Any notice or other document required to be given under this agreement or any communication between the parties with respect to any of the provisions of this Agreement shall be in writing and may be sent by electronic mail to the correct email address, facsimile transmission to the correct number, post or hand delivery to the last known business address of the party upon whom it is being served. Notice shall be deemed to have been effected within 24 hours of the date of sending of the notice when sent by electronic mail or facsimile transmission, within 72 hours of the date of posting of the notice when sent by post and upon delivery when hand delivered.

(a)A notice shall be delivered as follows:

(i) if to **GOM**, to:

Beverley Mendes
Permanent Secretary
Ministry of Communications Works & Labour
Brades
Montserrat
Fax: (664) 491-6659
Email: mcw@gov.ms

(ii) if to the **Contractor**, to:

Address: .....

Email: ……

(iii) In proving the giving of a notice it shall be sufficient to prove respectively that the notice was left at the relevant party's address or that the envelope containing the notice was properly addressed and dispatched or dispatch of any electronic transmission used was confirmed.

SCHEDULE 2

The Contractor will provide the services/deliverables described in column 1 within the timelines indicated in column 2 in return for the fees in column 3:

Services/Deliverables	Timelines	Fees

SCHEDULE 3

Obligations of each party under this agreement

Contractor's obligations	**GOM's obligations**

SCHEDULE 4

List all documents making up the contract

Tender for Construction of 90m of Reinforced Concrete "U" Drain in Palm Loop					
Item	**Description**	**Units**	**Quantity**	**Rate**	**Total**
1.00	**Preliminaries**				
1.01	Include for contractor's mobilisation and employees' insurance. Contractor shall be responsible for ensuring a safe working environment and proper protection of the works during construction.	item			
2.00	**Health and Safety**				
2.01	In accordance with the labour regulations the works shall be carried out in a manner that is safe to all employees on site and to the general public. Hence employees shall be attired with high visibility vest, hard hats and enclosed footwear. Provision shall also be made for employees to wear safety goggles where necessary.	item			
3.00	**Compaction of foundation base**				
3.01	Provision of Labour & a plate compactor for preparation of the "U" drain base to receive concrete.	m^2	90.00		
4.00	**Construct Reinforced Concrete "U" Drain**				
4.01	Construct reinforced concrete "U" drain in compliance with drawing details on Sheet No.S-01. Include for the necessary formwork and shoring and also for backfilling upon completion of drainage works.	m	90.00		
5.00	**Installation of Culvert & Headwalls**				
5.01	Provide labour for the installation of 36" dia. HDPE culvert	item			
5.01	Construct reinforced concrete headwalls & catchment/ discharge box in compliance with draw on Sheet No.S-01. Include for the necessary formwork and shoring and also for backfilling upon completion of drainage works.	m^2	11.30		
6.00	**Laboratory Testing**				
6.01	Administration of quality controls as it relates to works undertaken inclusive of concrete, soil, aggregate etc. Nb: Testing certificate must be presented for approval of work quality before payment certifcate can be processed.	P.Sum			$480.00
	Total to form of Tender				

GOVERNMENT OF

MONTSERRAT

PUBLIC WORKS DEPARTMENT

GENERAL CONDITIONS

OF

CONTRACT

GENERAL CONDITIONS

1 Definitions

a) The “Contract” means these General Conditions together with the Specification drawings and includes the contract agreement

b) The “Employer” means the Government of Montserrat

c) The “Engineer” means a duly authorized representative of the Employer

d) The “Contractor” means the company appointed to carry out the works

e) The “Colony” means the colony of Montserrat

f) The “Site” means the lands and/or other places on under or through which Works are to be carried out

g) The “Works” means the works to be executed in accordance with this Contract as described in the Specification

h) The “Language” of the Contract shall be English

i) The “Law” applicable to the Contract, shall be the Laws of Montserrat

2 Contract Document - Priority

1) Contract Agreement
2) The Drawings
3) Specifications
4) Conditions of Contract
5) Any other document forming part of the Contract

3 Extent of Contract

The Contract comprises of the construction and completion of all Works described in the Specifications, Drawings and Bill of Quantities and to supply all necessary labor, plant and temporary works to complete the described works together with such materials as are required by the Specifications.

4 Power to Vary or Omit

a) The Employer reserves the right to vary from time to time during the progress of the works, the Specifications or Drawings and shall in writing, notify the Contractor of such variation. If the instructions are given orally, they shall, within two days be confirmed in writing by the Engineer, in the event of any such variation involving an alteration in the cost, or in the period required for completion an agreed revision of contract price and/or time of completion may be made, any such alterations should be deemed part of the Contract.

b) No variation, alteration or addition to the work indicated in the Specification and/or Drawing shall be made unless the written instruction of the employer has been obtained.

5 Assignment of Contract

1) The Contractor shall remain responsible to the Employer for workmanship and manner of workmanship defaults and neglects of any sub-contractor or agent or workman employed by him.

6 Supply Materials

1) The Contractor shall within the agreed contract price, supply such materials as required and detailed by the Specifications

7 Setting Out

1) The Contractor shall be responsible for setting out of the work.

8 Workmanship

i. The Contractor shall at all times carry out his works in accordance with the laws of the Colony.

ii. The Employer may from time during the course of the Contract inspect any completed or part-completed work of the Contractor. If the Employer is not satisfied with such work, he in writing, inform the Contractor of his dissatisfaction.

iii. Not withstanding any such progress inspection by the Employer the Contractor shall at all times carry out the Contract in a workman-like manner. On completion of the works, the Contractor shall satisfy the Employer as to the quality and fitness of the work.

9 Removal of Debris

The Contractor shall remove all debris caused by their work from time to time as it accumulates and shall leave the site clean on completion of the Contracted Works.

10 Supervision of Works and Skilled Workmen

a) The Contractor shall provide all necessary superintendence during the execution of the works.

b) The Contractor shall employ in and about the execution of the Works only such persons who are carefully skilled and experienced in their several trades.

c) The Supervising Officer may (but not unreasonably or vexatiously) issue instructions requiring the exclusion from the Works of any person employed thereon.

11 Contractor's Plant

The Contractor shall provide at their own cost all tools, and other plant necessary for the purpose of carrying out the specified Work in an organized and expeditious manner.

12 Payment Fees

The Contractor shall be responsible for the payment of all fees necessary for the completion of the Contract required by a Statutory Authority within or without the Colony.

13 Safety

a) The Contractor is responsible for the safety of all persons employed by him.

b) He shall in no way carry out any work that could be seen to endanger the life of any of his employees or of any member of the general public, including any other employee of the employer.

14 Injury to or death of a person

The Contractor shall be liable for and shall, indemnify the Employer against any expense, liability, loss, claim or proceedings whatsoever arising under any statute or at Common Law in respect of personal injury to or death of any person whomsoever arising out of or in the course of or caused by the carrying out of the Works.

15 Damage to Property

The Contractor shall be liable for and indemnify the Employer against any expense, liability, loss, claim or proceedings in respect of any damage whatsoever to any property real or personal insofar as such damage arises out of or in the course of or by reason of the carrying out of the Works and is due to any negligence, omission and default of the Contractor is responsible.

16 Evidence of Insurance

The Contractor shall produce such evidence as the Employer may reasonably require that the insurance referred to herein have been taken out and are in force at all material times.

17 Traffic Control

Due to the nature of the Works it will be the responsibility of the Contractor to ensure that a system of traffic control is in operation, including no vehicular access, if necessary.

18 Payment to the Contractor

Payment to the Contractor will be made after the issue of an Engineer’s certificate based on the amount of work completed to date. A retention of 5% will be held from the value of each certificate up to a maximum of 3% of the contract sum. Such retention money will be released at the end of the warranty period provided that all works and repairs have been executed to the satisfaction of the employer.

19 Warranty Period

A warranty period of 12 months is part of the Contract agreement, during which time the Contractor bears the full responsibility for the execution of maintenance of the works and any repair or correction which might become necessary due to the failure and incorrect performance of the Contractor.

20 Handing Over Completed Works

The Contractor shall notify the Employer in writing of his completion of the contracted Works. Said work shall be subject to the satisfaction of the employer and the statutory body having jurisdiction that all the works is completed and in good order. The Supervising Officer shall certify the date when in his opinion, the works have reached practical completion. This date shall be the date of commencement of the warranty period.

21 Failure to Meet Completion Date

Should the contractor fail to complete the contracted works within the agreed time he shall be subject to a fine of 1% of the contract price a day, for every day the completion is overdue.

22 Matters not Contained in the Contract

Any matter not explicitly provided for within this Contract shall be in the matter of a separate agreement between the Employer and Contractor. Any such agreement shall be part of his Contract.

23 Matter of Disagreement

If a dispute arises under this Contract, the parties agree that they would first exhaust the provisions outlined in sections 46, 47 and 48 of the Public Finance (Management and Accountability) Procurement regulations 2012. If the parties fail to come to an amicable resolution through the provisions outlined above, then the dispute shall be settled with the help of a mutually agreed-upon mediator in Montserrat. The parties shall share any costs and fees other than attorney fees associated with the mediation equally.

24 Contracts Documents

a) The Contractor shall receive two complete copies of Contract Documents
b) Subsequent to the commencement of the Contract, the Contractor shall receive a copy of all additions to and amendments to the Specifications or drawings.

25 DETERMINATION OF THE CONTRACT

1) Default by the Contractor

If, before the date for practical completion, the Contractor shall make a default in any one or more of the following respects:

a) Without reasonable cause he wholly or substantially suspends the carrying out

of the works, or

b) He fails to proceed regularly or diligently with the works, or

c) He refuses or neglects to comply with a written instruction given by the Engineer and by such refusal or neglect the works are materially affected

The Engineer may give to the Contractor a notice specifying the default or defaults.

If the Contractor continues with the default for 14 days from the issue of the notice under the contract the Employer may by a further notice to the Contractor determine the employment of the Contractor under this Contract. Such determination shall take effect on the date of receipt of such further notice.

A notice of determination shall not be given unreasonably or vexatiously.

2) Consequences of determination under clause 25 .i.

The Engineer shall determine the amount due to the Contractor which shall include loss, damage or expenses incurred by the Employer as a direct consequence of the determination. A final payment certificate will be prepared accordingly.

3) Determination by the Contractor or Employer

If, before the date of practical completion, the carrying out of the whole or substantially the whole of the uncompleted works is suspended by reason of one or more of the events stated below for a period of three months or more

a) Force majeure, or

b) The Engineer’s instruction

Then the Contractor or the Employer may upon expiry of the period of the suspension gives notice to the other that unless suspension is terminated within 7 days after the receipt of such notice.

The Employer shall pay to the Contractor, the total value of the work properly executed at the date of determination of the employment of the Contractor, such value ascertained in accordance with the conditions as if the employment of the Contractor had not been determined

A notice of determination shall not be given unreasonably or vexatiously.

26 SUSPENSION OF THE UNCOMPLETED WORKS

a) The Engineer may issue instructions in regard the postponement of any or all of the works to be executed under this contract.

27 CONTRACTOR PERFORMANCE REPORT

a) It is a requirement of the Client for the Engineer to assess the performance of the Contractor upon completion of the agreed works. The assessment will be based on the following criteria;

i. The project deliverables achieved,
ii. Organization & management of works,
iii. Quality of work provided,
iv. Health & Safety plan implementation,
v. Management of Finances & budget,
vi. Technical performance & adherence to specifications,
vii. Completion time and scheduling.

b) The assessment has an overall maximum score of 1 and the following are the ratings that can be achieved;

1.00 – 0.75 = Very Good Performance
0.74 – 0.50 = Good Performance
0.49 – 0.25 = Poor Performance
0.24 – 0.10 = Very Poor Performance

c) If Contractor has attained an overall score less than 0.50 at the end of the contract performance reporting period, the Contractor will be subjected to sanctions by procuring entities.

d) Once a contractor has attained a first score of less than 0.50 which indicated poor performance, he/she will be sanctioned and is allowed to bid on projects that has an estimated value EC$50,000 or less. This sanction will be implemented for 12 months.

e) If the Contractor has a second score on another project less than 0.50, the Contractor will be suspended from being eligible to bid on any project regardless of the value. This suspension and sanctions will run for 1 year.

f) After a 1-year suspension or sanction, the Contractor will be allowed to bid only on contracts valued at EC$ 50,000 or less. If on this occasion the Contractor's score is 0.75 or greater only then will he be allowed to bid on contracts valued above EC$50,000. If his score is less than 0.75 but is equal to or greater than 0.5, he will only be allowed to bid contracts valued at $50,000 or less until he can achieve a higher score.

Government of Montserrat
Public Works Department

Specifications
of
Labour and Materials
for

Construction of Reinforced Concrete U-Drain in Palm Loop

CONTENTS

Section	
1	General Items
2	Earthworks
3	Road Pavement
4	Drainage
5	Concrete for Structural Works

SECTION 1 — GENERAL ITEMS

1.1 SITE SERVICES

Any arrangements that the Contractor enters into regarding the provision of electricity, water and other services shall be the sole responsibility of the Contractor. The Contractor shall take all reasonable care to ensure that water is not wasted. The Contractor shall be liable for all charges arising from such arrangements

1.2 SITE POSSESSION

The contractor is responsible for obtaining permission to enter private lands.

1.3 PLANT HIRE

The contractor shall be responsible for payment of all plant hire charges from PWD or others for plant the contractor uses on this project. The Employer shall not be responsible for delays or costs attributable to the delivery, performance or workmanship of plant or equipment under hire from PWD. The Contractor shall be responsible for the actions of any plant on hire and shall provide adequate instruction and supervision of drivers, plant, and machines.

1.4 DISRUPTION

The Contractor is responsible for arranging the Works to minimise disruption to, local residents and commercial activities in the vicinity of the site. Full and sufficient precautions to ensure the safety of all traffic through and around the work site and of traffic that is diverted by the Works shall be taken at all times, such measures to be approved by the PWD Engineer. Signs shall be erected and maintained on the Site and at prescribed points on the approaches to the Site for the direction and control of traffic. The sizes of all such signs and the lettering and wording thereon shall be approved before erection. Construction and excavations shall be signed posted and, during periods of darkness lighted.

In the event of the operation of single-way traffic becoming necessary on any particular length of the Works or on the approaches to the Works, through traffic routes shall be maintained by providing a width of at least 3m for single-way traffic. Manually “Stop/Go” signal shall be used and be of an approved colour and type.

The Contractor is obliged to seek the approval of the Engineer before occupying any area of the site for the storage of materials, plant or equipment or welfare facilities.

1.5 UTILITY COMPANY SERVICES

The Contractor shall be responsible for contacting the utility companies to arrange for location of their plant at the site. The Contractor shall also notify the companies of any excavation in the vicinity of their plant and give sufficient notice to allow them to attend on site if required.

The contractor shall locate all buried plant in the vicinity of any area of excavation and mark the position clearly on site. The Contractor shall locate buried service within any area of excavation by hand digging before mechanical excavation is used.

The Contractor shall be deemed to be in control of all plant hired to him and shall be responsible for its actions. Should any utility company equipment be damaged by the Contractor or plant hired to him, the Contractor shall be responsible for paying any charges or costs associated with its repair. The Contractor shall also allow free and unhindered access to utility company employees carrying out any such repair work.

1.6 INSURANCE

The Contractor is required to obtain contractors all risk insurance to cover at least public liability and damage to property and persons. The Contractor shall be required to prove that he as such insurance and that the sums insured are sufficient for the works in hand prior to commencement of the works. The Contractor shall ensure that the insurance remains valid throughout the period of the works and that any premiums due are paid. The Engineer may request proof of insurance at any time during the works.

SECTION 2 — EARTHWORKS

2.1 GENERAL

This work shall comply with the General Conditions.

2.2 WORK INCLUDED

Any and all excavation, filling, backfill and grading required to accomplish work in this Section as can be reasonably inferred from the drawings and as hereinafter specified.

If necessary, any loose shallow material, soft organic deposits or similar unsuitable material shall be excavated prior to backfilling ditch to the required level.

Locate and mark all services in the vicinity of any excavation in consultation with the utility company concerned. Where any utility is thought to cross an area of excavation it is to be located by hand digging prior to the use of mechanical excavation.

Remove, protect, cap or otherwise dispose of, as approved by utility company or local authorities, any utilities, sewers or any underground obstructions encountered.

All necessary shoring and bracing.

Provide and maintain all required pumping to keep excavation sufficiently dry until completion of foundation work and backfilling.

2.3 SURVEYS

Bench marks, monuments and other reference marks shall be properly maintained and if destroyed, accurately and properly replaced by the Contractor.

The Contractor will be responsible for all setting out. Relevant information will be available from PWD on award of contract.

2.4 STRIPPING OF TOP SOIL

All suitable topsoil to be reused shall be stripped and stockpiled where directed within the limit lines of the contract premises or as directed by the Engineer.

Top soil shall be spread or disposed of as directed or indicated by the Engineer and/or drawings.

2.5 EXCAVATION

2.5.1 **General.** This work shall consist of excavation, disposal or compaction of all materials not being removed under some other item which is encountered within the limits of the Contract in accordance with the specifications and in close conformity with the lines, grades, thickness and cross-sections shown on the plans or established by the Engineer.

2.5.2 **Unsuitable Material.** Material that is unsuitable for the planned use shall be excavated and disposed of as directed by the Engineer. The removal and disposal of such unsuitable material will be paid for in the actual quantities removed to construct the works only if such removal is required to carry out the works shown on the Plans or in the Specifications.

2.6 STRUCTURE EXCAVATION AND BACKFILL

2.6.1 **General.** Structure excavation shall consist of the removal of material for the construction of foundations for bridges, retaining walls, head-walls, culverts, or other structures, and other excavation designated on the Plans or in the Specifications as structure excavation.

Structure backfill shall consist of furnishing material, if necessary, and placing and compacting backfill material around structures to the lines designated on the Plans.

Structure excavation and structure backfill shall include the furnishing of all materials and equipment; the construction or installation of all cofferdams and other facilities which may be necessary to perform the excavations and to place and compact the backfill; and the subsequent removal of such facilities, except where they are required or permitted by the Plans or Specifications to remain in place.

2.6.2 **Inspection.** Whenever any structure excavation is completed, the Contractor shall notify the Engineer who will make an inspection of the foundation. No concrete or masonry shall be placed until the foundation has been approved by the Engineer.

2.6.3 **Structure Backfill Requirements.** Structure backfill shall not be placed until the structure has been inspected by the Engineer and approved for backfilling. No backfill material shall be deposited against the back of concrete abutments or concrete retaining walls, until the concrete has developed not less than the specified 28-day compressive strength. Backfill at the inside of bridge wing-walls shall be placed before railing bases on the wing-walls are constructed.

Material used for structure backfill shall have a sand equivalent of not less than 20 and shall have the following grading:

Sieve Size	**Percent Passing**
4"	100
No. 4	35-100
No. 30	20-100

Structure backfill shall be placed in 8-inch horizontal lifts and shall be mechanically compacted to a minimum relative compaction of 90 percent.

2.6.4 **Pervious Backfill.** Pervious backfill material shall be placed behind bridge abutments, wing-walls and retaining walls as shown on the Plans and in accordance with the following requirements.

Pervious backfill material shall consist of gravel, crushed gravel, crushed rock, natural sands, manufactured sand, or combinations thereof and shall conform to the following grading requirements:

Sieve Size	**Percent Passing**
3/4"	100
3/8"	80-100
No. 100	0-8
No. 200	0-3

That portion of filter material passing a No. 4 sieve shall have a sand equivalent of not less than 60.

Sand and gravel sourced from beaches shall not be permitted unless it has been thoroughly washed in clean water. Such sand and gravel shall be tested for the presence of salts before placing.

All weep holes shall be backed with 2 cubic feet of course aggregate — with no more than 50% of all faces fractioned — securely tied in a burlap sack and placed in such a manner that the backing covers the weep holes and extends at least 12 inches above the bottom of the opening. An 8-inch square section of 1/4-inch galvanized or aluminium screen having a minimum wire diameter of 0.03 inches shall be firmly attached at the back of each weep hole before the material is placed.

Pervious backfill material shall be placed in layers along with and by the same methods specified for structure backfill. Pervious backfill material at any one location shall be approximately the same grading, and, at locations where the material would otherwise be exposed to erosion, shall be covered with at least a 1-foot layer of earthy material approved by the Engineer.

2.7 **SHORING AND BRACING**

Include all shoring and bracing necessary to retain earth banks, adjoining buildings and prevent caving in or displacement of adjacent soil, improvements or buildings.

SECTION 3 — ROAD PAVEMENT

3.1 GENERAL

This Work shall comply with the General Conditions.

3.2 WORK INCLUDED

This Work shall consist of the shaping, trimming, compacting and finishing of the sub-grade, the grading and finishing of all unpaved shoulders and slopes, and the preparation of all areas for topsoil, loam, riprap or slope paving as shown on the Plans or as directed, shall be constructed in accordance with these specifications and in close conforming with the lines, grades and typical cross-sections shown on the Plans or established by the Engineer.

3.3 SUBGRADE PREPARATION

3.3.1 **General.** This section shall govern the preparation of natural, filled, or excavated roadbed material prior to the placement of sub-base or base material, pavement, curbs and gutters, driveways, sidewalks or other roadway structures.

3.3.2 **Preparation of Subgrade.** Scarifying and cultivating will be required for dry soils which are impervious to the penetration of water, for soils which contain excessive amounts of moisture which may result in unstable foundations, for soils which are non-uniform in character which may result in non-uniform relative compactions and subsequent differential settlements of finished surfaces, or when pavement is to be placed directly on the roadbed material. Unsuitable material found below the processing depth for subgrade specified herein shall be excavated and disposed of as directed by the Engineer.

After rough grading has been completed, when scarifying and cultivating are required, the roadbed shall be loosened to a depth of at least six (6) inches. The loosened material shall then be worked to a finely divided condition and all rocks larger than three (3) inches in diameter shall be removed. The moisture content shall be brought to optimum by the addition of water, by the addition and blending of dry suitable material or by the frying of existing material. The material shall then be compacted by approved equipment to the specified relative compaction.

Uniform pervious soils that allow the immediate penetration of water or uniform impervious soils which will allow the penetration of water to a depth of at least six (6) inches after the addition of a suitable wetting agent, will not require scarifying and cultivating unless a condition previously set forth in this sub-section requires such processing. When scarifying and cultivating are not required, the moisture content of the top six (6) inches of the subgrade material shall be brought to optimum by the addition of water at the surface, and the material shall be compacted by approved equipment to the specified relative compaction.

3.3.3 **Relative Compaction.** Except when pavement is to be placed directly on subgrade material, the top six (6) inches of subgrade material shall be compacted to a relative compaction of 95%. When base or sub-base material, curb, gutter, driveways, or sidewalks are to be placed on the subgrade material, the top six (6) inches of such subgrade material shall be compacted to a relative compaction of 90 percent.

After compaction and trimming, the subgrade shall be firm, hard, and unyielding.

3.3.4 **Subgrade Tolerances.** Subgrade for pavement, sidewalk, curb and gutter, driveways, or other roadway structures shall not vary more than 0.02 foot from the specified grade and cross-section. Subgrade for sub-base or base material shall not vary more than 0.04 foot from the specified grade and cross-section. Variations within the above specified tolerances shall be compensating so that the average grade and cross-section specified are met.

3.3.5 **Grading of Areas Not To Be Paved.** Roadway areas where “grade only” is called for on the Plans shall be graded to meet the tolerances for base subgrade. The surface shall be constructed to a straight grade from the finish pavement or curb elevations shown on the Plans to the elevation of the existing ground at the extremities of the area to be graded.

3.3.6 **Adjustment of Manhole Frame and Cover Sets to Grade.** Utility manhole and vault frames and covers within an area to be paved or graded will be set by the owners thereof to finish grade.

The Contractor shall remove all debris attributable to his work from manholes.

3.4 **UNTREATED BASE**

3.4.1 **General.** Untreated base for pavement, curb, drains and similar types of improvements, shall be constructed as specified.

3.4.2 Material used for untreated base shall have the following grading:

Sieve Size	**Percent Passing**
1-1/2"	100
3/4"	90-100
3/8"	50-80
No. 4	35-55
No. 30	10-30
No. 200	2-9

3.4.3 **Spreading.** Imported aggregate bases shall be delivered to the roadbed as uniform mixtures and each layer shall be spread in one operation. Segregation shall be avoided and the base shall be free from pockets of coarse or fine material.

Aggregate bases shall be deposited on the roadbed at a uniform quantity per linear foot, which quantity will provide the required compacted thickness within the tolerances specified herein without resorting to spotting, picking up or otherwise shifting the aggregate base material. At the time aggregate base is spread, it shall have a moisture content sufficient to obtain the required compaction. Such moisture shall be uniformly distributed throughout the material.

Where the required thickness is six (6) inches or less, the base material may be spread and compacted in one layer. Where the required thickness is more than six (6) inches the base material shall be spread and compacted in two or more layers of approximately equal thickness, and the maximum compacted thickness of any one layer shall not exceed six (6) inches. Each layer shall be spread and compacted in a similar manner.

The use of motor graders will be permitted during depositing, spreading and compacting operations, except where self-propelled spreaders are specified.

When the subgrade for aggregate base consists of cohesion-less sand and written permission is granted by the Engineer, a portion of the aggregate base may be dumped in piles upon the subgrade and spread ahead from the dumped material in sufficient quantity to stabilize the subgrade. Segregation of aggregates shall be avoided and the material as spread should be free from pockets of coarse or fine material.

3.4.4 **Compacting.** Rolling shall always be commenced along the edge of the area to be compacted and the roller shall gradually advance toward the centre of the area to be compacted.

Rollers shall be operated along lines parallel or concentric with the centreline of the road being constructed, and no material variation there from will be permitted. All rollers must be maintained in good mechanical condition.

The relative compaction of each layer of compacted base material shall not be less than 95 percent, except in the areas back of curb (under sidewalks and driveways). Compaction in the excepted areas shall have a minimum relative compaction of 90 percent.

The surface of the finished aggregate base at any point shall not vary more than 0.02 foot above or below the grade established by the Engineer.

Base which does not conform to the above requirements shall be reshaped or reworked, watered and thoroughly compacted to conform to the specified requirements.

3.5 CEMENT CONCRETE PAVEMENT

3.5.1 **General.** Unless otherwise specified, Portland Cement concrete pavement shall be constructed of concrete prepared as prescribed below:

a. All concrete shall be to working strength of 3000 PSI in 28 days, shall have as a minimum OPC content of 500 lbs per cubic yard and a maximum free water/cement ratio of 0.5.

b. Cover to reinforcement shall be 2 inches. Reinforcement shall be round mild steel bars unless shown otherwise on the drawings.

c. All reinforced concrete shall be fully compacted by means of power-driven immersion type vibrators. The concrete shall be vibrated until the section is a solid mass entirely free of voids and cavities. Care should be taken to ensure excessive vibration does not occur. Vibrators shall not be allowed to come into contact with the reinforcement, shutter ties or shutter faces.

d. The concrete must not be loaded or otherwise worked on until the period of curing is complete or the concrete has reached an adequate strength, whichever comes later.

e. Construction joints at positions where no contraction or expansion joint is to be constructed shall have the full area of reinforcement continuing across the joint. The surface of the joint shall be scabbled to remove surface laitance prior to casting the adjacent section.

3.5.2 Forms and Headers

3.5.2.1 **General.** The formwork must be sufficiently rigid and tight to prevent loss of grout or mortar from the concrete at all stages and for the appropriate method of placing and compacting the concrete. Formwork (including supports) shall be sufficiently rigid to maintain the forms in their correct position and to correct shape and profile so that the final concrete structure is within specification. All formwork shall have its surface scraped smooth and clean before re-use. Any damage to formwork shall be repaired before re-use.

Forms and headers shall be either wood or metal. They shall be set plumb and true to line and grade, with the upper edge thereof set to the grade of the pavement to be constructed; and shall be rigidly installed on a true alignment and so maintained for a distance in advance of placing the pavement to provide for at least a one-day run of concrete. Headers shall rest firmly on the subgrade or base. They shall be oiled immediately prior to the placing of the concrete and shall remain in place for at least 12 hours after concrete has been placed. Forms and headers must be removed before the work will be accepted.

3.5.2.2 **Wooden Forms.** Wooden forms shall be constructed of 3-inch nominal lumber in pieces not less than eight (8) feet long, except where changes in alignment or grade necessitate the use of material of smaller dimensions. The lumber used shall be free from warp and other imperfections which would impair the strength for the use intended; shall have square edges (which shall be slightly bevelled) and square ends; shall be surfaced on the upper edge; and shall be not more than 1/2-inch in depth than the specified thickness of the edge of the pavement.

Such forms shall be secured by nailing to side stakes spaced not more than four (4) feet apart and driven into the subgrade vertically to a depth not less than twelve (12) inches, and so that the tops will be below the upper edge of the header. The stakes shall be of sufficient length and cross-sectional area to adequately resist lateral displacement of the headers during the paving operations.

Wooden headers shall be spliced by nailing a board to the outside of the headers. The board shall be at least four (4) feet long, one (1) inch thick, and at least six (6) inches wide (or the depth of the header, whichever is least), and shall be centered on the joint.

3.5.2.3 **Metal Forms.** Metal forms shall be free from warp, have sufficient rigidity to resist springing during the paving operations, and shall be not less in depth than the specified thickness of the edge of the pavement being constructed. They shall be secured by means of metal stakes spaced not more than five (5) feet apart and driven below the top of the forms. They shall be designed so as to be driven through openings in the forms to lock them in position.

3.5.3 **Mixing**

a. Concrete shall be mixed by purpose-made, power-driven concrete mixers. Hand-mixing of concrete will not be permitted.

b. Each batch shall be mixed until the concrete is uniform in colour and consistency and for not less than three (3) minutes, which shall be measured from the time when all the solid material is in the mixing drum. All the mixing water shall have been introduced before 25 percent of the mixing period has elapsed. No further water shall be added to the mix once it has left the mixer. Any concrete which has become partly set or too stiff to compact properly shall be discarded.

c. Volume batching shall be done in purpose-made boxes or by calibrated concrete mixers or with carrying handles which shall be carefully supervised to ensure that the boxes are struck level each time. Water must be measured by volume.

d. The mixer and associated batching and placing equipment shall be thoroughly cleaned out at the end of each day's work.

e. The concrete shall be transported from the mixer to the position of placing quickly and in such a way that segregation does not occur. The time between mixing and placing shall not exceed 10 minutes.

3.5.4 **Placing Concrete**

3.5.4.1 **General.** Concrete shall be placed on a subgrade sufficiently dampened to ensure that no moisture will be absorbed from the fresh concrete.

a. Before any concrete is placed, an inspection shall be made to ensure that no dirt, shavings, loose stones, etc. have been allowed to remain in or about the formwork. Formwork and reinforcement shall also be well watered immediately prior to placing the new concrete.

b. Immediately after being mixed, the concrete shall be deposited on the subgrade to the required depth over the entire width of the section.

c. Concrete shall be placed gently in position to avoid segregation and not allowed to fall freely from a height greater than six (6) feet.

d. At the end of each day's run, or at any time when operations are stopped for a period of more than 40 minutes, a rigid transverse header shall be placed vertically and at a right angle across the pavement at the location designated by the Engineer and the pavement shall be finished to form a square vertical joint against which the work may be resumed. Hand-mixing may be used only if necessary to provide sufficient concrete to compete paving to the expedient header.

Great care shall be taken to ensure that reinforcement and embedded structural steel is not displaced during concreting or disturbed after the initial set has taken place.

3.5.5 **Finishing**

3.5.5.1 **General.** The concrete shall be consolidated, and the surface finished true to grade and cross-section. Upon completion the surface shall be free of any unevenness greater than 1/8 inch when checked with a 10-foot straightedge placed on the surface of the pavement. The 10-foot straightedge shall be furnished by the Contractor and shall be at the Work site prior to the commencing of the placing of the concrete.

3.5.5.2 **Tamping.** The concrete shall be distributed uniformly between the side forms as soon as it is placed, after which the concrete shall be struck off and tamped by means of a mechanical tamper. The tamper shall be operated at right angles to the centreline of the pavement, and tamping continued until the concrete is thoroughly consolidated to the specified cross section and sufficient mortar for finishing purposes has been brought to the surface.

Steel-shod hand tampers or vibrating bars may be substituted in those cases where the use of a mechanical spreader and tamper would be obviously impracticable.

Approved concrete vibrating equipment shall be used in conjunction with the mechanical tamper to consolidate the concrete adjacent to the forms or existing pavement.

3.5.5.3 **Floating**

a. **General.** After tamping, the surface of the concrete shall be floated by either the finishing machine method or the transverse-float method described below.

b. **Finishing-machine Method.** The concrete shall be floated smooth and true to grade with an approved finishing machine.

c. **Transverse-float Method.** The concrete shall be floated at least twice with a long-handled float at least 5 feet wide, following which the surface of the concrete shall be finished smooth and true to grade, with a wooden float 8 feet long, 2 inches thick, and 6 inches wide. It shall be rigidly ribbed and with adjustable screws between the rib and float board to ensure a true and flat surface on the under side at all times. The float shall be operated from the side of the pavement, and parallel with the centreline.

The edge of the float shall be used to cut down all high areas, and the material so removed shall be floated into the depressions until a true surface is obtained. Each successive pass of the float shall half-lap the previous pass.

3.5.5.4 **Final Finishing.** After being finished, the outside edges of pavement shall be rounded to 1/2-inch radius; and transverse joints, expansion joints, and joints adjacent to an existing pavement shall be rounded to 1/4-inch radius.

After working to a smooth finish, draw a stiff bristled broom across the surface of the slab to produce an even non-slip finish of fine parallel lines free from ridges and depressions.

3.5.6 **Transverse Expansion Joints**

3.5.6.1 **General.** Unless otherwise specified all transverse joints shall be constructed perpendicularly to the centerline of the pavement and the face of all joints shall be perpendicular to the finished surface of the pavement.

Transverse expansion joints shall be installed at 20-foot centres. Expansion joint filler material shall have a minimum thickness of 1/2-inch, a maximum thickness of 3/4 inch. After the concrete has been finished, an edger of 1/4-inch radius shall be used on each side of the expansion joint filler. The expansion joint filler shall be cleaned of all concrete mortar.

3.5.7 **Curing.** Immediately after the finishing operations have been competed and as soon as marring of the concrete will not occur, the entire surface of the newly placed concrete shall be covered

and cured. Curing may be accomplished by flooding or by polythene sheeting in close contact.

SECTION 4 — DRAINAGE

4.1 GENERAL

This Work refers to the Specification and Construction of curbs, slipper drains, U drains and culverts.

4.2 CURBS

Shall be precast concrete units 5" wide 9" high and 30" in length and shall be laid in accordance with the drawings with a 1/2" mortar joint between curbs. Curbs may either be laid on a mortar bed on the kerb bedding or laid directly on to the concrete curb bedding before it has cured, curbs are to be tapped down into the concrete bedding to achieve the correct levels. All curbs are to have a curb backing placed behind the laid curb as shown on the drawings.

4.3 SLIPPER DRAIN

Concrete mixing and placing shall meet the requirements of that for concrete for structural works. The size and layout shall be as shown on the drawings. The exposed face shall be troweled to a smooth finish.

4.4 PERIMETER DRAIN

Concrete mixing and placing shall meet the requirements of that for concrete for structural works. The size, layout and reinforcement shall be as shown on the drawings. The exposed faces shall be troweled to a smooth finish.

4.5 CULVERT

The requirements for concrete and associated works shall be that for concrete for structural works. The size, layout and reinforcement shall be as shown on the drawings. The exposed faces shall be troweled to a smooth finish. The contractor shall ensure that all formwork inside the culvert is removed before requesting approval of the completed works

4.6 CONCRETE HEADWALLS, PARAPETS AND SLABS

The concrete slabs and headwalls shown on the drawings shall be constructed according to the requirements given for concrete for structural works in this Specification. The reinforcement for the slabs, parapets and headwalls shall be as shown on the drawings. All exposed surfaces shall be given a smooth trowelled finish.

5. CONCRETE FOR STRUCTURAL WORKS

5.1. **General.** Unless otherwise specified, headwalls, drains, culverts and other structural elements shall be constructed of concrete prepared as prescribed below:

a. All concrete shall be to working strength of 3000 PSI in 28 days, shall have as a minimum OPC content of 500 lbs per cubic yard and a maximum free water/cement ratio of 0.5.

b. Cover to reinforcement shall be 1.5 inches. Reinforcement shall be deformed type 2 high yield steel reinforcing bars unless shown otherwise on the drawings.

c. All reinforced concrete shall be fully compacted by means of power-driven immersion type vibrators. The concrete shall be vibrated until the section is a solid mass entirely free of voids and cavities. Care should be taken to ensure excessive vibration does not occur. Vibrators shall not be allowed to come into contact with the reinforcement, shutter ties or shutter faces.

d. The shutters shall not be stripped until the concrete has cured sufficiently to not require the support of the shutters. The concrete must not be loaded or stressed until it has reached an adequate strength to prevent damage occurring. If the Contractor wishes to strip shutters or load the concrete at an early age he must have concrete cubes tested to show that sufficient strength has been attained.

e. Construction joints at positions where no contraction or expansion joint is to be constructed shall have the full area of reinforcement continuing across the joint. The surface of the joint shall be scabbled to remove surface laitance prior to casting the adjacent section.

5.2. Forms and Headers

5.2.1. **General.** The formwork must be sufficiently rigid and tight to prevent loss of grout or mortar from the concrete at all stages and for the appropriate method of placing and compacting the concrete. Formwork (including supports) shall be sufficiently rigid to maintain the forms in their correct position and to correct shape and profile so that the final concrete structure is within specification. All formwork shall have its surface scraped smooth and clean before re-use. Any damage to formwork shall be repaired before re-use.

5.2.2. Formwork shall be either wood or metal. They shall be set plumb and true to line to the profiles shown on the drawings. They shall be oiled immediately prior to the placing of the concrete and shall remain in place until the concrete has reached sufficient strength as described in section d above. Formwork must be removed before the work will be accepted.

5.3. Materials for Reinforced Concrete

5.3.1. **Cement** - Cement shall be Ordinary Portland Cement from a reputable supplier. All cement is to be stored in dry conditions. Any bag opened shall be completely used on the same day or discarded. Any bag found to have become damp or where the cement has partly hardened shall be discarded and not used in the works.

5.3.2. **Admixtures** - Admixtures shall not be used in concrete without the express consent of the P.W.D. Engineer.

5.3.3. **Aggregate**

5.3.3.1. Coarse aggregate shall be clean hard gravel or crushed rock with no deleterious properties. Before the use of aggregate from any source the Contractor shall obtain the P.W.D. Engineers approval of that source, if the Contractor intends to change the source during the works fresh approval of the new source shall be sought. Where

required by the Engineer samples of the proposed aggregate shall be tested to ensure that it has satisfactory properties for the proposed use.

5.3.3.2. Fine aggregate shall be sand or crushed rock fines with no deleterious properties, the requirements for testing and approval shall be as noted for coarse aggregate.

5.3.3.3. Aggregate extracted for sea beaches shall not be used unless it has been thoroughly washed in clean water and tested to show no salt remains.

5.3.4.Reinforcement

5.3.4.1. Reinforcing bar or mesh is to be from a reputable supplier and quality certificates shall be supplied when requested by the P.W.D. Engineer.

5.3.4.2. Reinforcement is to be fixed in the positions shown on the drawings. Reinforcement is to be firmly tied to prevent movement when concrete is placed. Purpose made cover blocks and spacers shall be used as required.

5.3.4.3. No steel element, reinforcing steel or tie wire shall intrude into the specified cover of the section.

5.3.4.4. All reinforcement is to have adequate lap where bars join and adequate anchorage into concrete at the free ends of bars, all as shown on the drawings. Consult with the P.W.D. Engineer in the event of any doubt as to the structural requirements.

5.3.4.5. The contractor shall give the P.W.D. Engineer at least 24 hours notice before casting any element to allow for inspection of the fixed reinforcement and shutters.

5.4. **Formwork**

5.4.1.Formwork shall be set up to give a smooth surface with no visible joins between sheets and no significant marking of the concrete surface with imperfections in the formwork. Formwork oil shall be selected to avoid any staining or marking of exposed surfaces.

5.5. **Mixing**

5.5.1.Concrete shall be mixed by purpose-made, power-driven concrete mixers. Hand-mixing of concrete will not be permitted.

5.5.2.Each batch shall be mixed until the concrete is uniform in colour and consistency and for not less than three (3) minutes, which shall be measured from the time when all the solid material is in the mixing drum. All the mixing water shall have been introduced before 25 percent of the mixing period has elapsed. No further water shall be added to the mix once it has left the mixer. Any concrete which has become partly set or too stiff to compact properly shall be discarded.

5.5.3.Volume batching shall be done in purpose-made boxes or by calibrated concrete mixers or with carrying handles which shall be carefully supervised to ensure that the boxes are struck level each time. Water must be measured by volume.

5.5.4.The mixer and associated batching and placing equipment shall be thoroughly cleaned out at the end of each day's work.

5.5.5.The concrete shall be transported from the mixer to the position of placing quickly and in such a way that segregation does not occur. The time between mixing and placing shall not exceed 10 minutes.

5.5.6. Where requested by the P.W.D. Engineer, the Contractor shall cast concrete test cubes in British Standard cube test moulds using the methods specified in the British Standard. The Engineer can supply copies of the cube making instructions if requested. The Contractor shall be responsible for ensuring that the moulds are available on site when required. The Contractor shall be responsible for ensuring that the cubes are stored in an environment similar to the environment of the structure. The Contractor shall permanently label each cube and keep records indicating where within the structure the concrete represented by the cubes was placed. The Engineer will be responsible for testing of cubes.

5.6. **Placing Concrete**

5.6.1. Before any concrete is placed, an inspection shall be made to ensure that no dirt, shavings, loose stones, etc. have been allowed to remain in or about the formwork. Formwork and reinforcement shall also be well watered immediately prior to placing the new concrete, but standing water in the base of the shutter will not be permitted.

5.6.2. Immediately after being mixed, the concrete shall be deposited in the shutter to an even depth across the entire width of the section. The production and placing of concrete shall be a continuous operation until the position of agreed construction joints is reached.

5.6.3. Concrete shall be placed gently in position to avoid segregation and not allowed to fall freely from a height greater than six (6) feet.

5.6.4. Great care shall be taken to ensure that reinforcement and embedded structural steel is not displaced during concreting or disturbed after the initial set has taken place

5.6.5. The concrete shall be compacted using a powered vibrating poker until the material is satisfactorily compacted and the release of air bubbles has ceased.

5.6.6. At the end of each day's run, or at any time when operations are stopped for a period of more than 20 minutes, a rigid transverse stop end shall be placed at any vertical construction joint formed. All construction joints either horizontal or vertical shall be scabbled to remove any surface laitance before adjacent concrete is cast.

5.6.7. Hand mixing of concrete for structures will not be permitted.

5.6.8. **Finishing**

5.6.8.1. Unformed surfaces shall be finished to a smooth trowelled finish worked to give a dense, blemish free surface with no trowel marks.

5.6.8.2. Application of mortars or screeds to concrete surfaces to fill blow holes or other surface blemishes will only be permitted with the express consent of the P.W.D. Engineer.

5.6.8.3. All Exposed corners of headwalls, U drains and other concrete elements shall have the corners chamfered with a 1" x 1" (25mm x 25mm) chamfer.

5.6.9. **Curing**

Immediately after the finishing operations have been completed and as soon as marring of the concrete will not occur, the entire surface of the newly placed concrete shall be covered and cured. Curing may be accomplished by flooding or by polythene sheeting in close contact.

GOVERNMENT OF MONTSERRAT

TENDER SUBMISSION ANTI-COLLUSION CERTIFICATE

I/WE CERTIFY THAT THIS TENDER IS MADE IN GOOD FAITH, AND THAT WE HAVE NOT FIXED OR ADJUSTED THE AMOUNT OF THE TENDER BY OR UNDER OR IN ACCORDANCE WITH ANY AGREEMENT OR ARRANGEMENT WITH ANY OTHER PERSON. I/WE ALSO CERTIFY THAT WE HAVE NOT AND I/WE UNDERTAKE THAT WE WILL NOT BEFORE THE AWARD OF ANY CONTRACT FOR THE WORK:

DISCLOSE THE TENDER PRICE OR ANY OTHER FIGURES OR OTHER INFORMATION IN CONNECTION WITH THE TENDER TO ANY OTHER PARTY (INCLUDING ANY OTHER COMPANY OR PART OF A COMPANY FORMING PART OF A GROUP OF COMPANIES OF WHICH I AM/WE ARE A PART OF) NOR TO ANY SUB-CONTRACTOR (WHETHER NOMINATED OR DOMESTIC) NOR SUPPLIER (WHETHER NOMINATED OR DOMESTIC) OR ANY OTHER PERSON TO WHOM SUCH DISCLOSURE COULD HAVE THE EFFECT OF PREVENTING OR RESTRICTING FULL COMPETITION IN THIS TENDERING EXERCISE

ENTER INTO ANY AGREEMENT OR ARRANGEMENT WITH ANY PERSON THAT THEY SHALL REFRAIN FROM TENDERING, THAT THEY SHALL WITHDRAW ANY TENDER ONCE OFFERED OR VARY THE AMOUNT OF ANY TENDER TO BE SUBMITTED OR OTHERWISE COLLUDE WITH ANY PERSON WITH THE INTENT OF PREVENTING OR RESTRICTING FULL COMPETITION

PAY, GIVE OR OFFER PAY OR GIVE ANY SUM OF MONEY OR OTHER VALUABLE CONSIDERATION DIRECTLY OR INDIRECTLY TO ANY PERSON FOR DOING OR HAVING DONE OR CAUSING OR HAVING CAUSED TO BE DONE IN RELATION TO ANOTHER TENDER OR PROPOSED TENDER FOR THE WORK ANY ACT OR THING OF THE SORT DESCRIBED AT I), II) OR III) ABOVE.

I/WE FURTHER DECLARE THAT I/WE HAVE NO KNOWLEDGE EITHER OF ANY SUM QUOTED OR OF ANY OTHER PARTICULARS OF ANY OTHER TENDER FOR THIS CONTRACT BY ANY OTHER PARTY.

I/WE FURTHER CERTIFY THAT THE PRINCIPLES DESCRIBED ABOVE HAVE BEEN, OR WILL BE, BROUGHT TO THE ATTENTION OF ALL SUB-CONTRACTORS, SUPPLIERS AND ASSOCIATED COMPANIES PROVIDING SERVICES OR MATERIALS CONNECTED WITH THE TENDER AND ANY CONTRACT ENTERED INTO WITH SUCH SUB-CONTRACTORS, SUPPLIERS OR ASSOCIATED COMPANIES WILL BE MADE ON THE BASIS OF COMPLIANCE WITH THE ABOVE PRINCIPLES BY ALL PARTIES.

I/WE ACKNOWLEDGE THAT ANY BREACH OF THE FOREGOING PROVISIONS SHALL LEAD AUTOMATICALLY TO THIS TENDER BEING DISQUALIFIED AND MAY LEAD TO CRIMINAL OR CIVIL PROCEEDINGS.THE GOVERNMENT OF MONTSERRAT SHALL TREAT ANY TENDER RECEIVED IN CONFIDENCE BUT RESERVES THE RIGHT TO MAKE THE SAME AVAILABLE TO ANY OTHER FUNDING ORGANISATION OR STATUTORY REGULATORY AUTHORITY EITHER HAVING JURISDICTION OVER THE WORKS OR WHO MAY NOW OR AT ANY TIME IN THE FUTURE HAVE STATUTORY POWER TO REQUIRE DISCLOSURE OF THIS TENDER.

IN THIS CERTIFICATE, THE WORD 'PERSON' INCLUDES ANY PERSONS AND ANY BODY OR ASSOCIATION, INCORPORATED OR UNINCORPORATED; ANY AGREEMENT OR ARRANGEMENT INCLUDES ANY TRANSACTIONS, FORMAL OR INFORMAL AND WHETHER LEGALLY BINDING OR NOT; AND 'THE WORK' MEANS THE WORK IN RELATION TO WHICH THIS TENDER IS MADE.

SIGNATURE…… IN CAPACITY OF ……..

DATE……2016

DULY AUTHORISED TO SIGN TENDERS AND ACKNOWLEDGE THE CONTENTS OF THE ANTI-COLLUSION CERTIFICATE FOR AND ON BEHALF OF:

NAME OF FIRM……

FULL POSTAL ADDRESS……

TELEPHONE NO…… FAX NO ……

EVALUATION OF TENDER

Evaluation Criteria

The following evaluation criteria will be used to evaluate tenders received in response to this Invitation to Tender. The Administrative Compliance would be applied before the remaining criteria and is either pass or fail with failure meaning that bids would be deemed Non-compliant. **Tenders must achieve a minimum score of 65% to be considered for award of contract.**

Criteria Description	Weight (%)
Administrative Compliance	Pass/Fail
Financial Compliance	60
Technical Compliance & Tenderer's Experience	40

Tenderers that fail to meet the above qualifying score will be rejected and not considered for award of contract.

Administrative Compliance (Pass/Fail)

Tenderers must submit all the documents requested in the tender document. The tender checklist provides a list of requirements which need to be fulfilled. All Tenderers are required to fully complete the Form of Tender including the commencement time and the proposed completion time which are highlighted. In addition they need to fully complete the Bill of Quantities provided. A valid Tax Compliance Certificate need to be submitted with their submission. Tenderers should sign and date the Anti-Collusion statement. Similarly details of previous experience must be submitted in accordance with the Technical Compliance below. This is a pass/fail criteria. If **all** the above requirements are fulfilled then the tenderer would move onto the other evaluation criteria. If any of the above mentioned items are not submitted then the tender would be deemed non-compliant and rejected.

Financial Compliance (60%)

Tenderers must complete the Form of Tender and the Bill of Quantities and return them with their tender submission. The tendered price is a significant factor and the Government of Montserrat will seek to ensure that the works are undertaken at the most economically advantageous price. However, there are other factors which comprise the criterion and these will be considered proportionately. Government of Montserrat is not bound to accept the lowest or any tender. The percentage for this criterion will be calculated proportionately in comparison to other price submissions from tenders.

Technical Compliance & Experience (40%)

Adherence to technical specification is paramount. Prospective tenderers need to provide details of at least 2 previous contracts completed within the past 10 years of a similar nature to the scope of works of this tender with a value of a minimum $30,000.00 for material and labour and a minimum value of $12,000 for labour only. These details should include but are not limited to the following; the entity or person for which the work was completed, contact information for the entity or person, the value of the works, the location of the works. In addition the prospective tenders can submit award letters for works in lieu of the above mentioned information. The percentage for this criterion will be calculated proportionately in comparison to other submissions from tenders.

Start Date or Date of Award	Description of Works	Name of Client	Price of Contract	Date Completed

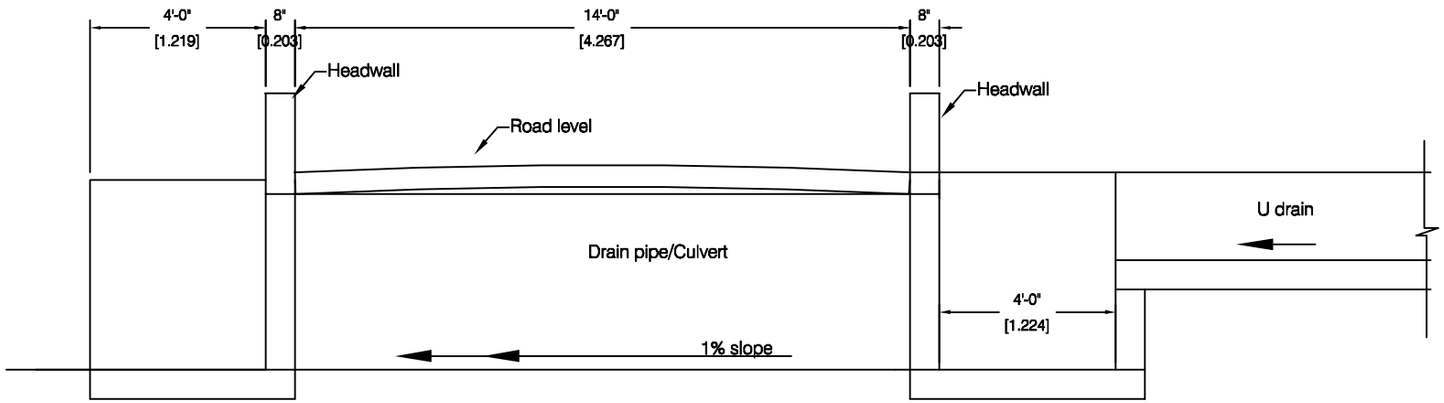

CULVERT LONGITUDINAL SECTION

SCALE nts

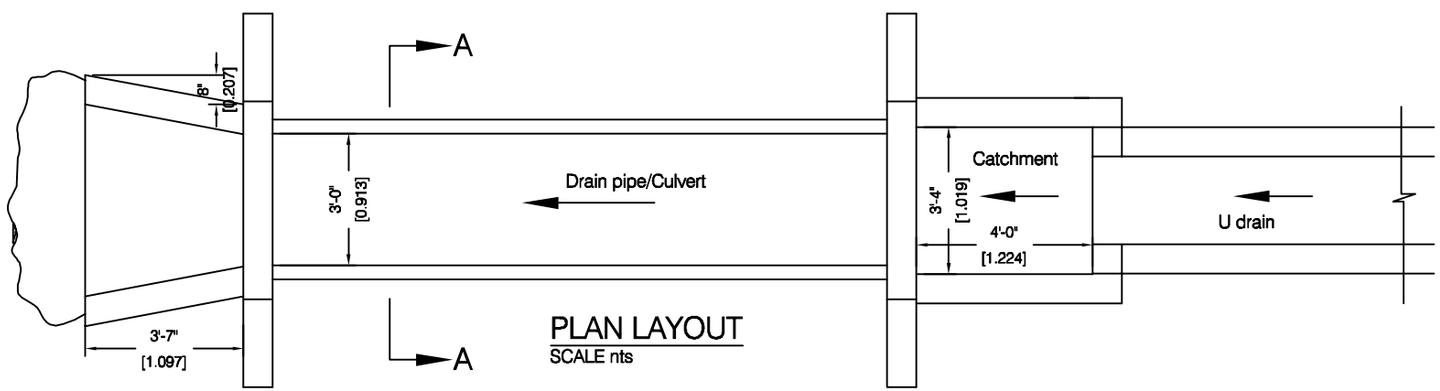

PLAN LAYOUT

SCALE nts

GENERAL NOTES

No.	Revision / Issue	By	Chk	Da

Public Works Department
P.O. Box 344
Montserrat
West Indies
Tel: 664- 491-2521/2
Fax: 664- 491- 3475
Email: gov.eng@candw.ms

PROJECT: PALM LOOP DRAINAGE

TITLE: DRAIN DETAILS

DESIGN: PWD | JOB #: 0

DRAWN: OREENJ

CHECKED: PWD

FILE PATH: 0

DATE: 16/09/16

SCALE: 0

SHEET NO.: 01

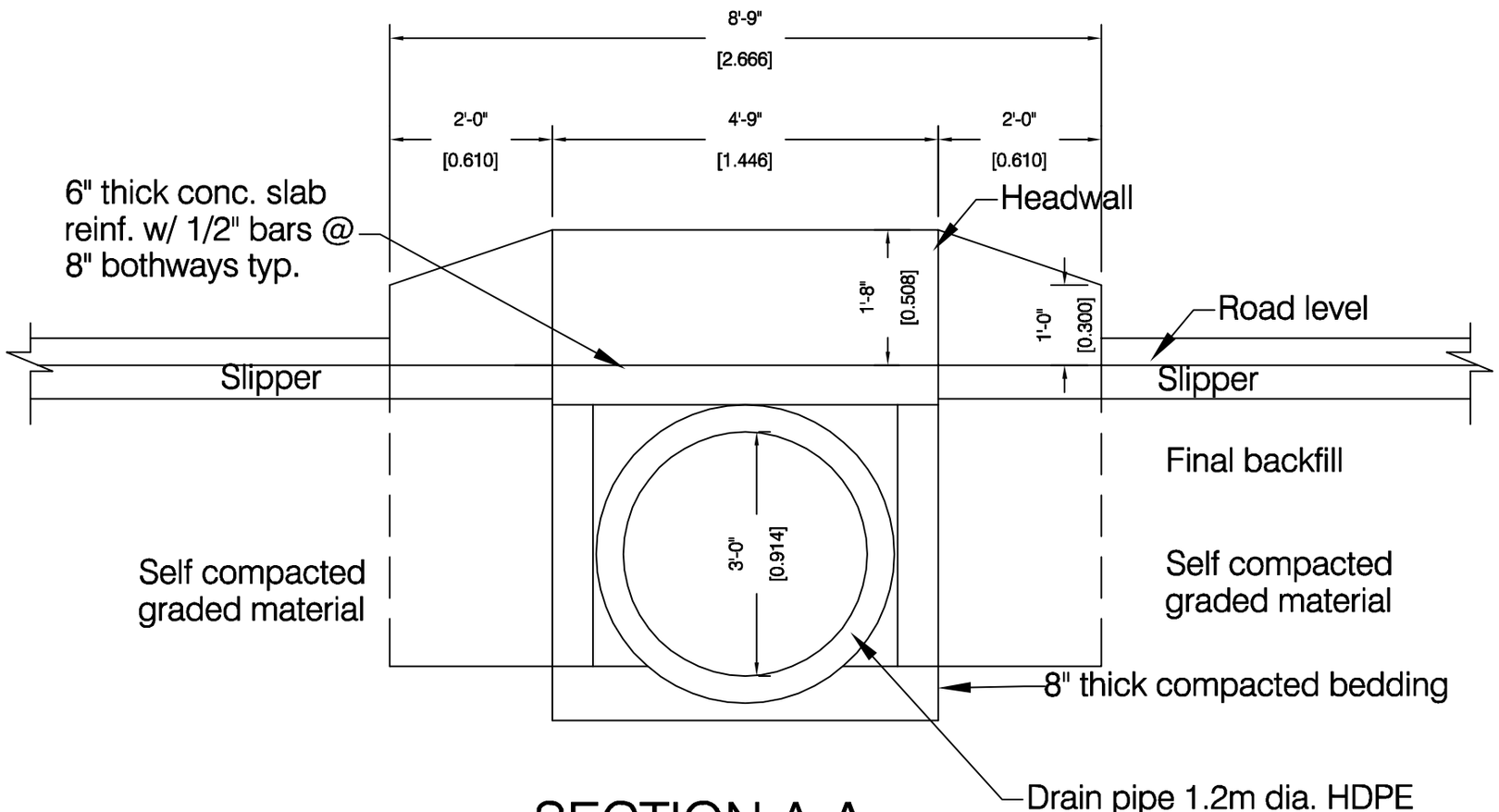

SECTION A-A

SCALE nts

GENERAL NOTES

No.	Revision / Issue	By	Chk	Da

Public Works Department
P.O. Box 344
Montserrat
West Indies
Tel: 664- 491-2521/2
Fax: 664- 491- 3475
Email: gov.eng@candw.ms

PROJECT: PALM LOOP DRAINAGE

TITLE: HEADWALL DETAIL

DESIGN: PWD | JOB #: 0

DRAWN: OREENJ

CHECKED: PWD

FILE PATH: 0

DATE: 16/09/16

SCALE: AS SHOWN

SHEET NO.: 02